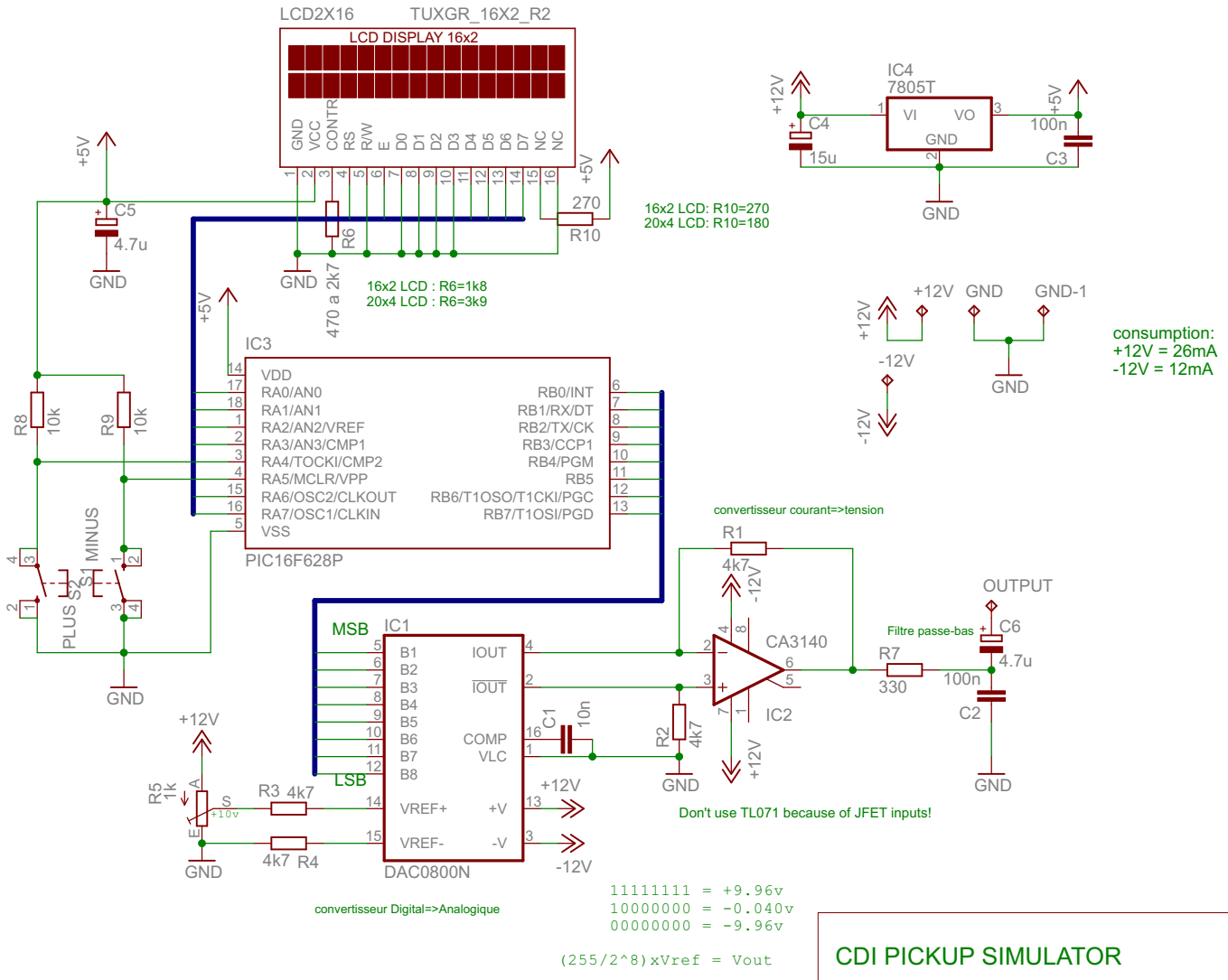

CDI PICKUP SIMULATOR

TITLE: DAC0800_layer2_c2

Document Number: TRANSMIC.NET TRANSMIC.FR

REV: v3

Date: 29/12/2018 10:35:00

Sheet: 1/1

29/12/2018 10:39:17 C:\Users\Thierry\Documents\Eagle\DAC\DAC0800_layer2_c2.sch (Sheet: 1/1)