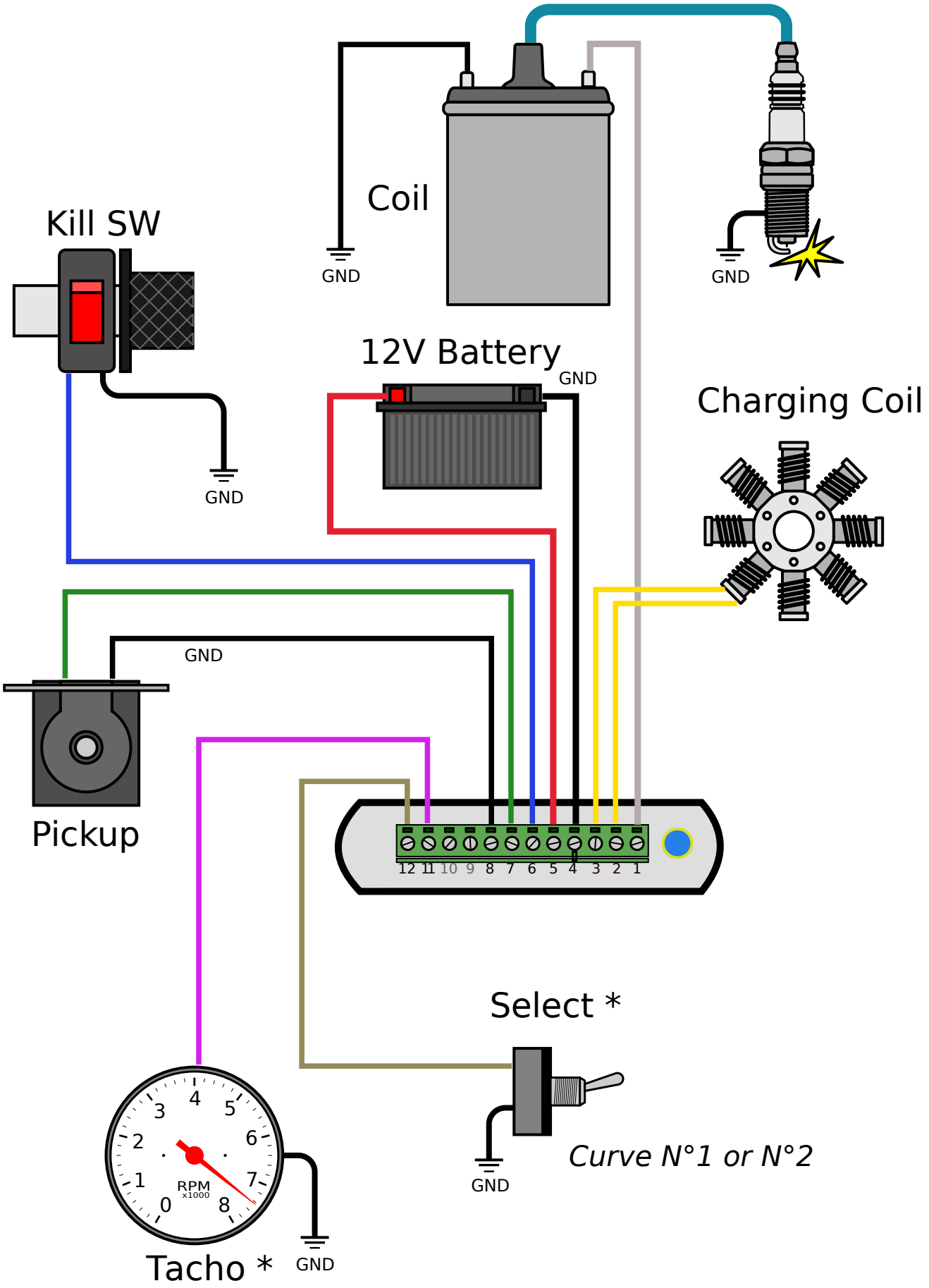
Coil
GND
GND
Kill SW
GND
12V Battery
GND
Charging Coil
GND
Pickup
12 11 10 9 8 7 6 5 4 3 2 1
Select *
GND
Curve N°1 or N°2
RPM
x1000
Tacho *
GND

** optional*