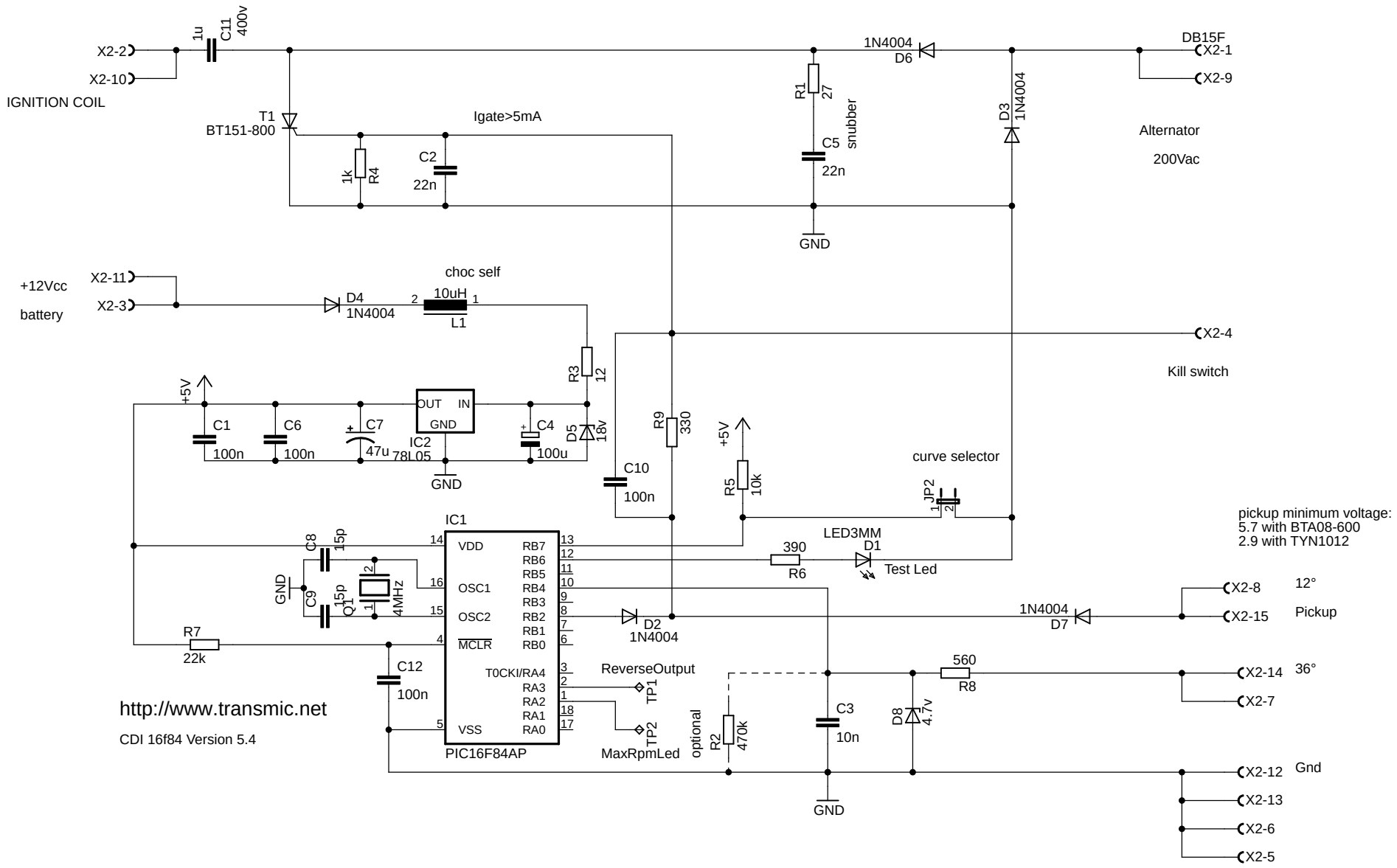
X2-2
X2-10
IGNITION COIL
1u
C11
400v
T1
BT151-800
Igate>5mA
1k
R4
C2
22n
1N4004
D6
R1
27
snubber
C5
22n
GND
D3
1N4004
DB15F
X2-1
X2-9
Alternator
200Vac
+12Vcc
battery
X2-11
X2-3
D4
1N4004
choc self
10uH
L1
R3
12
X2-4
Kill switch
+5V
C1
100n
C6
100n
C7
47u
IC2
78L05
OUT
IN
GND
C4
100u
D5
18v
R9
330
C10
100n
R5
10k
curve selector
JP2
pickup minimum voltage:
5.7 with BTA08-600
2.9 with TYN1012
IC1
VDD
OSC1
OSC2
MCLR
VSS
RB7
RB6
RB5
RB4
RB3
RB2
RB1
RB0
T0CKI/RA4
RA3
RA2
RA1
RA0
PIC16F84AP
C8
15p
C9
15p
Q1
4MHz
R7
22k
C12
100n
LED3MM
D1
390
R6
Test Led
D2
1N4004
ReverseOutput
TP1
TP2
MaxRpmLed
optional
R2
470k
C3
10n
D8
4.7v
1N4004
D7
X2-8
X2-15
12°
Pickup
560
R8
X2-14
X2-7
36°
X2-12
X2-13
X2-6
X2-5
Gnd
http://www.transmic.net
CDI 16f84 Version 5.4